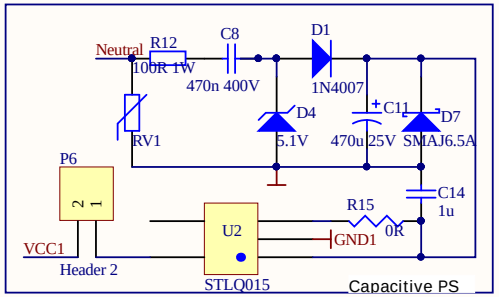

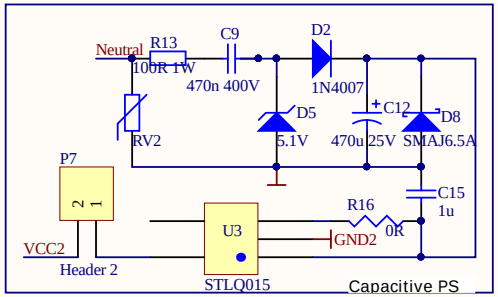

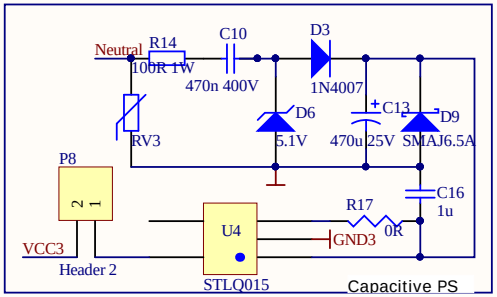

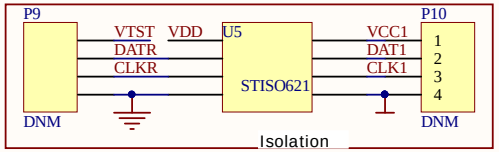

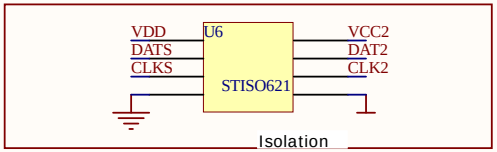

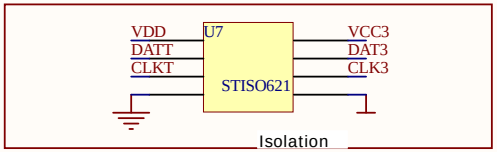

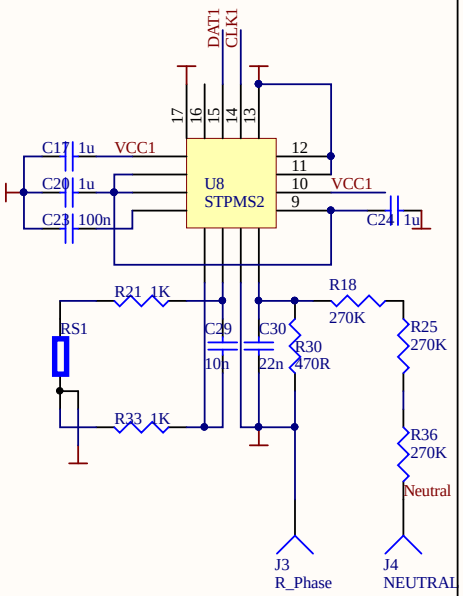

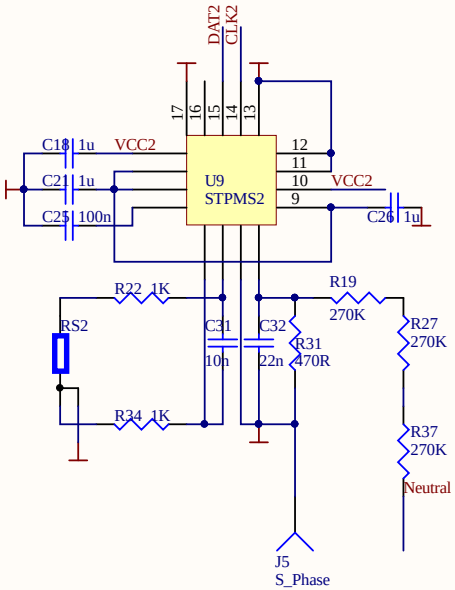

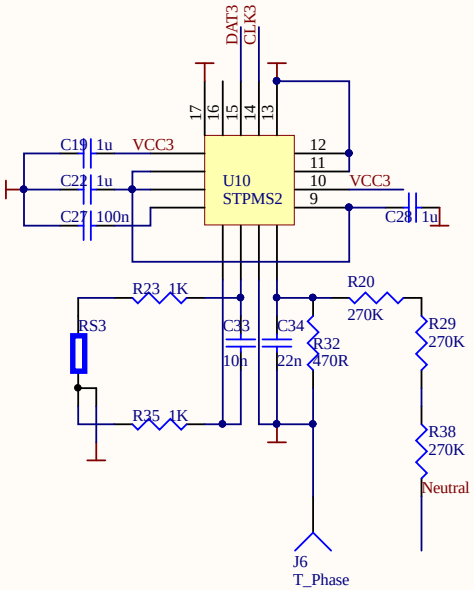

Title	*EVALSTPM-3PHISO*		
Size: A4	Number:	Revision:1.1	
Date:	Time:	Sheet 2 of 2	
File: EVALSTPM-3PHISO_STPMS2_section_V1.SchDoc			

life.augmented

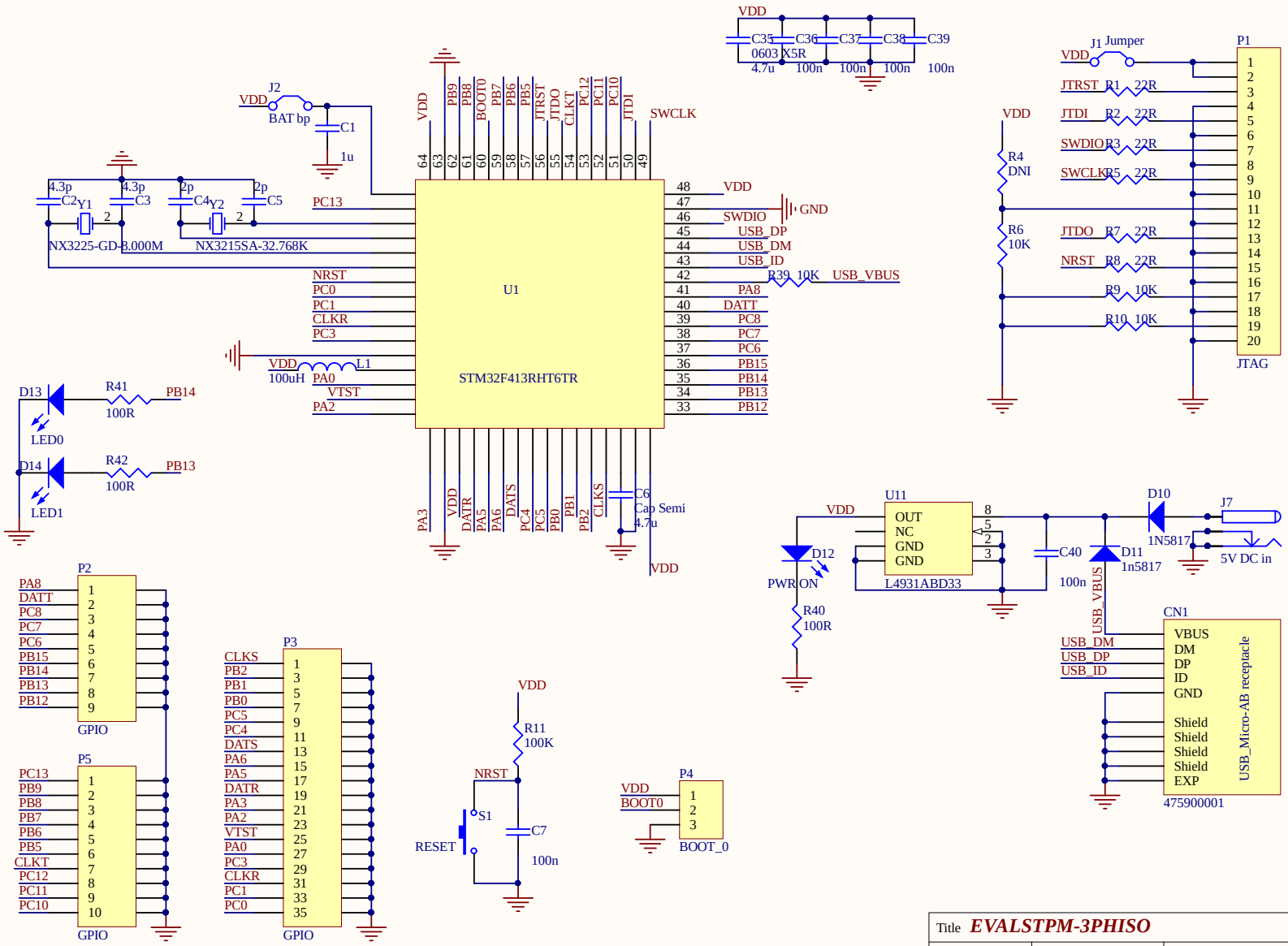

Title	*EVALSTPM-3PHISO*	
Size: A4	Number:	Revision:1.1
Date:	Time:	Sheet 1 of 2
File: EVALSTPM-3PHISO_MCU_section_V1.SchDoc		

life.augmented