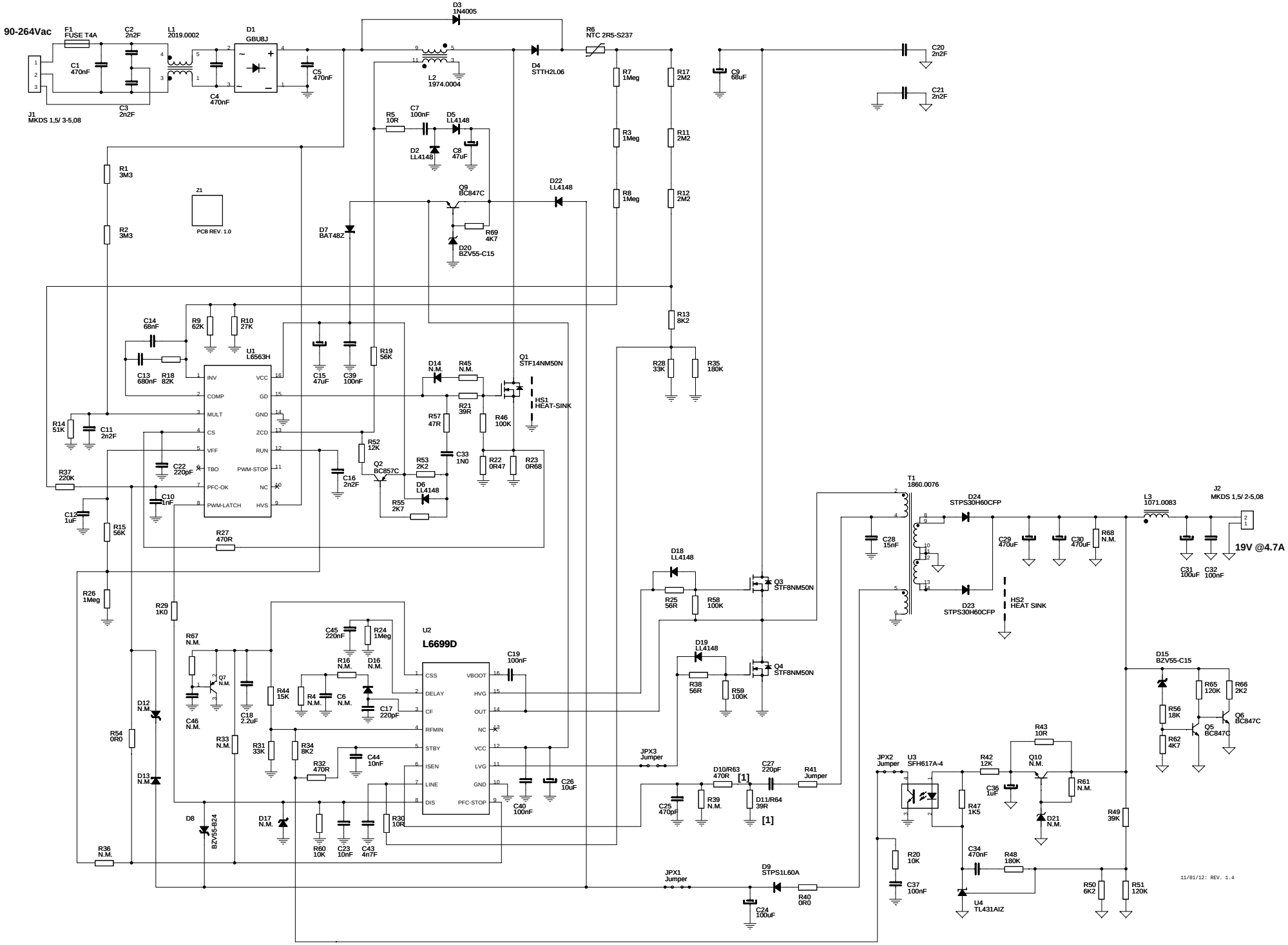
90-264Vac
F1
FUSE T4A
C2
2n2F
L1
2019.0002
D1
GBU8J
C1
470nF
C3
2n2F
C4
470nF
C5
470nF
J1
MKDS 1,5/ 3-5,08
D3
1N4005
L2
1974.0004
D4
STTH2L06
R6
NTC 2R5-S237
R7
1Meg
R3
1Meg
R8
1Meg
R17
2M2
R11
2M2
R12
2M2
C9
68uF
C20
2n2F
C21
2n2F
R5
10R
C7
100nF
D5
LL4148
D2
LL4148
C8
47uF
R1
3M3
R2
3M3
Z1
PCB REV. 1.0
D22
LL4148
Q9
BC847C
R69
4K7
D20
BZV55-C15
D7
BAT48Z
R13
8K2
R28
33K
R35
180K
C14
68nF
R9
62K
R10
27K
U1
L6563H
C13
680nF
R18
82K
INV
COMP
MULT
CS
VFF
TBO
PFC-OK
PWM-LATCH
VCC
GD
GND
ZCD
RUN
PWM-STOP
NC
HVS
C15
47uF
C39
100nF
R19
56K
D14
N.M.
R45
N.M.
Q1
STF14NM50N
HS1
HEAT-SINK
R21
39R
R46
100K
R57
47R
C33
1N0
R52
12K
Q2
BC857C
R53
2K2
D6
LL4148
R55
2K7
R22
0R47
R23
0R68
C16
2n2F
R14
51K
C11
2n2F
C22
220pF
C10
1nF
R37
220K
C12
1uF
R15
56K
R27
470R
R26
1Meg
R29
1K0
R67
N.M.
Q7
N.M.
C46
N.M.
D12
N.M.
D13
N.M.
R54
0R0
R33
N.M.
C18
2.2uF
R44
15K
R31
33K
R34
8K2
R32
470R
C44
10nF
C45
220nF
R24
1Meg
R16
N.M.
D16
N.M.
R4
N.M.
C6
N.M.
C17
220pF
U2
L6699D
CSS
DELAY
CF
RFMIN
STBY
ISEN
LINE
DIS
VBOOT
HVG
OUT
NC
VCC
LVG
GND
PFC-STOP
C19
100nF
C40
100nF
C26
10uF
D8
BZV55-B24
D17
N.M.
R60
10K
C23
10nF
C43
4n7F
R30
10R
R36
N.M.
JPX3
Jumper
D10/R63
470R
[1]
C27
220pF
R41
Jumper
C25
470pF
R39
N.M.
D11/R64
39R
[1]
JPX1
Jumper
D9
STPS1L60A
R40
0R0
C24
100uF
D18
LL4148
R25
56R
R58
100K
Q3
STF8NM50N
D19
LL4148
R38
56R
R59
100K
Q4
STF8NM50N
T1
1860.0076
D24
STPS30H60CFP
D23
STPS30H60CFP
C28
15nF
C29
470uF
C30
470uF
R68
N.M.
HS2
HEAT SINK
L3
1071.0083
J2
MKDS 1,5/ 2-5,08
19V @4.7A
C31
100uF
C32
100nF
D15
BZV55-C15
R65
120K
R66
2K2
R56
18K
Q6
BC847C
Q5
BC847C
R62
4K7
R43
10R
JPX2
Jumper
U3
SFH617A-4
R42
12K
Q10
N.M.
C36
1uF
R61
N.M.
R47
1K5
D21
N.M.
R49
39K
R20
10K
C37
100nF
C34
470nF
R48
180K
U4
TL431AIZ
R50
6K2
R51
120K
11/01/12: REV. 1.4