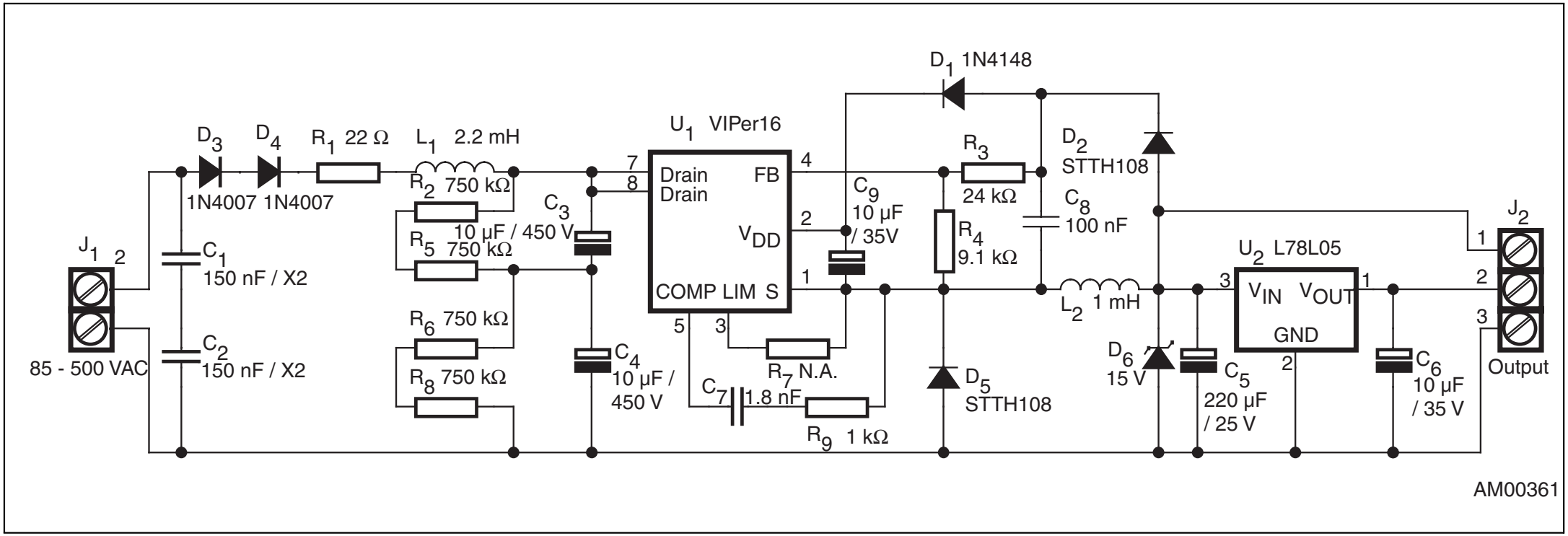STEVAL-ISA010V1 Schematic